Influx TECHNOLOGY

User Guide

ReXgen Air - Manual

Influx ReXgen Air

ABOUT THIS MANUAL

This document provides a brief idea of the usage, safety precautions, installation procedures and operation of the Influx ReXgen Air. This document is intended for professional engineers and academic researchers, allowing them to understand the concept of operating the device and integrating this knowledge into systems with components of other manufacturers.

DISCLAIMER

Translation of the original Product Manual ReXgen Air.

Version	Date	Remarks
1.0	07-04-2022	First official version
1.1	25-08-2022	Major upgrades
1.2	16-11-2022	Minor Changes

Table 1: Version Details

COPYRIGHT & LICENSE AGREEMENT

CONTACT ADDRESS

Influx Technology Ltd

Office 22, Building 03, Millbrook Proving Ground
Bedford, MK45 2JQ, United Kingdom
Telephone: +44 (0) 1525 842504,
Sales: sales@influxtechnology.com
Support: support@influxtechnology.com
www.influxtechnology.com

SAFETY INSTRUCTIONS

- Always ensure that the device is installed, connected, and commissioned by a qualified professional following all safety norms.
- Disconnect the device completely before handling it and disconnect any independently supplied output load circuits.
- Do not connect the housing to the Ground externally. This will suspend the reverse voltage protection of the power supply. Applying a reverse voltage, in this case, will destroy the supply circuits.
- Provide all the device connectors with plugs and any protection caps required to ensure protection class IP50.
- Never immerse the device in water or other liquids.
- The manufacturer must only repair the device.
- Keep substances that contain solvents away from the type label.

The following formatting and symbols will help you recognise the purpose of each paragraph:

WARNING ⚠

Severe injury or death. Probability: possible

CAUTION ⚠

Slight or medium injury. Probability: possible

ATTENTION! ⚠

Property damage

Notes

- Important usage instructions/notes/limits.

Table of Contents

1. OVERVIEW OF THE DEVICE

Influx
REXGEN AIR

CAN to Cloud

This chapter gives an overview of the device, its operating elements and functions, and its intended use.

Along with the free, user-friendly configuration software, the standalone ReXgen logger comes with the following advantages:

Key features

- Up to 4 CAN/CAN FD buses.
- x2 Analog Inputs
- x1 LIN bus*.
- x2 Digital inputs.
- Integrated 18Hz GNSS (u-Blox)
- Integrated IMU (6 axis)
- LTE CAT -1 connectivity.
- Secure Data transfer using FTPs and Amazon S3.
- Supports eMMC storage (up to 32GB).
- Encrypts data logs using Advanced Encryption Standard (AES).
- Enables Locking of the device using RSA data security.
- Open Libraries for logger management and data conversion.
- XML based configuration, Schema provided.
- Live CAN/CAN FD Monitoring.

- Supported Data formats ASAM MDF4, MATLAB (.mat), CSV, ASC, BLF, TRC*.
- Various sleep modes, with low power consumption.
- x4 configurable LEDs.
- CAN/J1939 filters.
- Micro USB 2.0 for data transfer and configuration.
- Automotive-grade Molex Mini50 connection system.
- Easily stackable and installable.
- Free powerful graphic interface application tool ReXdesk provided.

*Will be available via software update next quarter

*x1 micro -USB cable to be supplied with any quantity of ReXgen Air purchased.

*Works with AT&T and T-Mobile in USA

Available Models

Model	eMMC Storage	SIM Type	CAN/CAN FD	Ana/Dig I/P	Accelerometer & Gyroscope	GNSS
INF2116.21	8 GB	Nano	2	2	Yes	Yes
INF2116.22	16 GB	Nano	2	2	Yes	Yes
INF2116.23	32 GB	Nano	2	2	Yes	Yes
INF2116.41	8 GB	Nano	4	2	Yes	Yes
INF2116.42	16 GB	Nano	4	2	Yes	Yes
INF2116.43	32 GB	Nano	4	2	Yes	Yes

1.1 GENERAL INFORMATION

1.1.1 DEVICE ELEMENTS

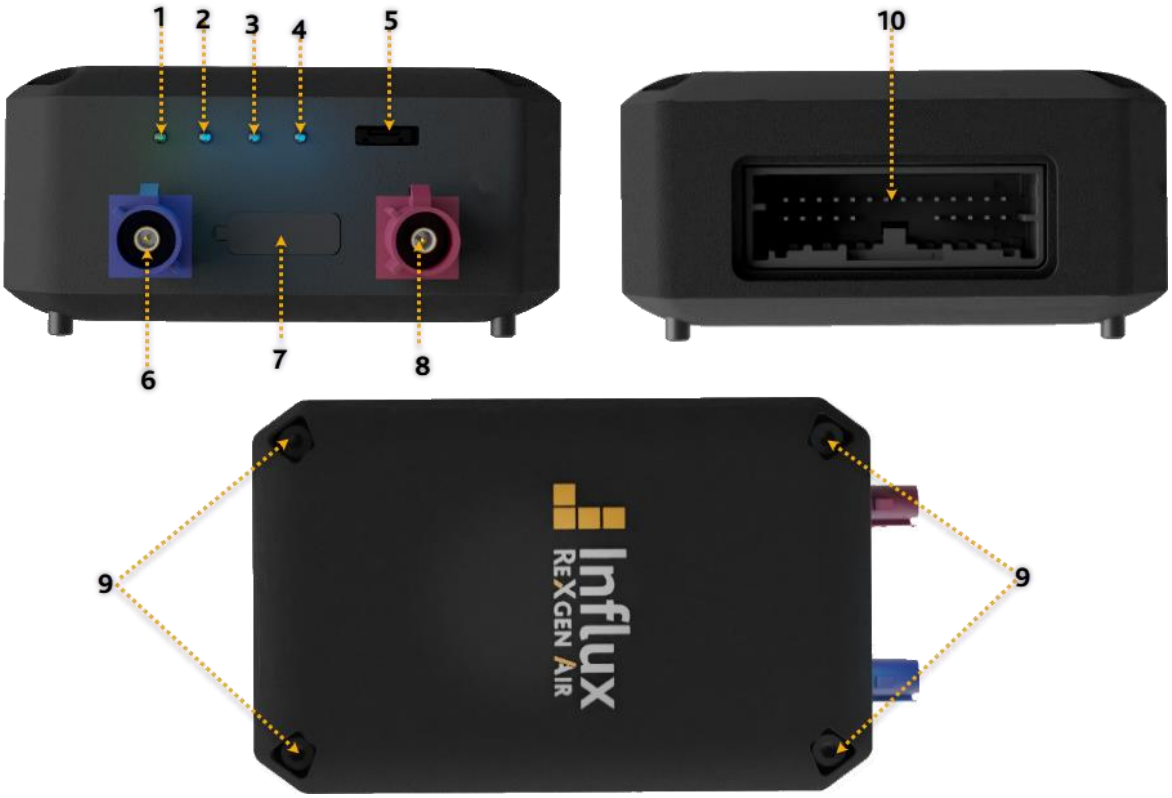

1 – Channel LED 1	6 – FAKRA C connector for GNSS
2 – Channel LED 2	7 – Nano Sim Slot
3 – Channel LED 3	8 – FAKRA D connector for LTE
4 – Channel LED 4	9 – Mounting Holes
5 – Micro USB connector.	10 – Molex Mini50 Dual Row 24 Pin connector.

1.1.2 PRODUCT DRAWINGS

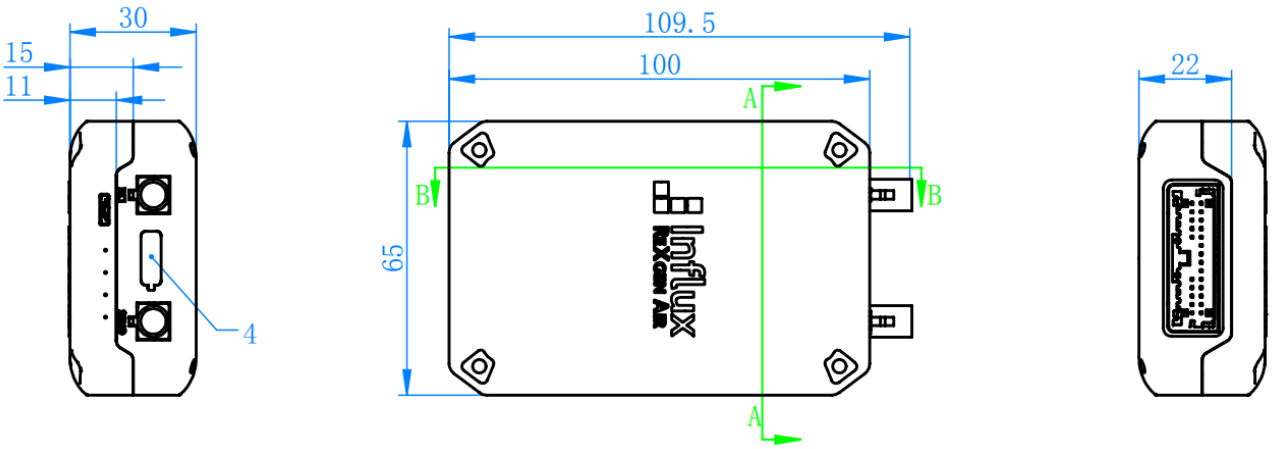

1.1.3 TECHNICAL SPECIFICATION

Functions	ReXgen Air
CAN Interfaces	Up to 4 x CAN/CAN FD ISO 11898-1: Compliant with CAN (up to 1 Mbit/s) ISO & Bosch CAN FD (up to 8 Mbit/s) Conforms to CAN protocol version 2.0 - part A, B Up to 20000 mps Meets the requirements of ISO 11898-2:2016 & ISO 11898-5:2007 physical layer standards
CAN/CAN FD Functions	CAN/CAN FD Bit timing selection SAE J1939 support (Source Address, Destination Address & PGN Filters) Silent Mode Configurable Periodic CAN Transmission CAN DBC Support CAN frame error detection
LIN Interface	1 x LIN (Master & Slave mode)
LTE	CAT 1 (see uBlox Lara R2 Series)
Inputs	2 x Digital and 2 x Analog (max sampling rate-1ms)
Instrumentation Supply	5 Volts (Ensure that current draw is not more than 100mA)
	Positioning & IMU Sensors
GNSS	Up to 18 Hz rate
	72-channel, GNSS L1C/A, SBAS L1C/A, QZSS L1C/A, QZSS L1-SAIF, GLONASS L1OF, BeiDou B1I , Galileo E1B/C
Position Accuracy	2.0 m CEP*
Acquisition	Cold starts: 26s Reacquisition: 2 s
Antenna	External FAKRA Code C
Accuracy	Velocity: 0.05m/s
	Heading: 0.3 degrees
	Others
Accelerometer	±2/±4/±8/±16 g full scale (max sampling rate-1ms)
Gyroscope	±125/±250/±500/±1000/±2000 dps full scale (max sampling rate-1ms)
PC Interfaces	Micro USB Type AB 2.0 interface (Standard version) USB interface via the Molex Mini50 connector (Optional)
Data Storage Capability	Up to 32 GB eMMC storage
Supported Protocols	CAN Monitoring (RAW CAN signals, SAE J1939 support)
LEDs	4

Triggering	Trigger on CAN ID, CAN Signal, Digital Input. Trigger on DM1 counter.
File Format Supported	RXD, RXE, ASAM MDF (.mf4), CSV, MATLAB, ASC, BLF
Data Transfer Protocol	FTPS and Amazon S3
Security Functions	Encryption of data logs, Locking of device.
Encryption Standard	RSA (for locking device) and AES (for log data)
Data Logger Configuration	Supplied with Influx ReXdesk configuration software, API, CLI
Configuration	XML based (Shema provided)
	Analog Input
Number of channels	2 x Bipolar single-ended inputs
Range	+/- 10 V
Resolution (ADC)	12 Bit
Max sampling rate	1 kHz
Input Impedance	> 50 K Ohms
Safe Applied Voltage	+/- 28 V
	Digital Input
Number of channels	2 x Unipolar single-ended inputs
Input Switching Thresholds	Low < 0.8 V, High > 2.5 V (up to 28V)
Safe Applied Voltage	+/- 28 V

* *CEP* - circular error probable

Integrated GPRS	LTE modem
Category	LTE CAT1
LTE CAT1 Bands	LTE FDD Bands: 1(2100 MHz) ,2(1500 MHz), 3(1800 MHz),4(1700 MHz), 7(2600 MHz), 8(900 MHz), 12(700 MHz), 13(700 MHz), 19(850 MHz), 20(800 MHz), 28(700 MHz)
Receiver input Sensitivity	-98dBm to -114dBm: 700MHz to 2100MHz
Antenna	External FAKRA Code D

* *Region and category of modem should be specified while ordering.*

* *Works with AT&T and T-Mobile in USA*

ELECTRICAL DATA

BUS & Signals	Operating Voltage
Power supply - OBD	+5 to +31V
Power supply - USB	+4.5 to +5.5V
CAN/CAN FD	+2 to +3V
LIN	0 to +24V
Digital Input	0 to +28V
Analog input	+/- 10V

Function	Description
Transceiver Protection	Bus fault protection: ±58 V Thermal-shutdown protection (TSD) Under-voltage protection
Enclosure	PC+ ABS
IP Rating	IP50
Dimension	L - 100 mm, W - 65 mm, H – 30 mm
Weight	112 Grams
Mounting Holes	4 mounting holes and screws
Stackable	Yes
Environmental Tolerance	**Working temperature** -40degC to +85degC; **Humidity** max 90%
Power Saving	Wake Up On CAN, Power Down Mode, Sleep Modes
Power Consumption	Normal Operation: 300 mA at 12 V Power Down Mode: <2 mA

1.1.5 INTENDED USE

The Influx ReXgen Air supports up to 4 CAN/CAN FD buses. It has GNSS, IMU and is specially designed to become a part of your fleet during production. Works on LTE CAT1, making it a cost-effective solution. The ReXgen Air is a data logger with on-board processing and telematics capabilities that connects machines to the cloud for data transfer using AWS (S3) or FTPS technology. The ReXgen Air provides an open platform and can be supported by any 3rd party tools to be integrated into any data system, allowing you to build your system to maintain your data. API includes functions to manage the logger over USB, retrieve and convert the data. ReXgen Air enables smart data collection and can be reconfigured configured remotely.

1.1.6 LIABILITY & WARRANTY

Influx Technology assumes no liability for damages caused by normal wear, installation errors, operating or maintenance faults. This is also applicable when the user modifies the devices, any accessories, or the software without the prior approval of Influx Technology.

1.2 DEVICE KIT

1.2.1 HARDWARE

Packaging will contain the following components:

ReXgen Air (INF 2116.2X/ INF 2116.4X)
Molex Mini50 Dual Row 24 Pin connector.
Micro USB Cable
Mounting Screws
*External antenna to be purchased in addition along with the extension cable. The price of the unit does not include the external antenna which can be purchased off the shelf.
*x1 micro-USB cable to be supplied with any quantity of ReXgen Air purchased.

1.2.2 SOFTWARE

ReXgen Air device will be supplied with a freely distributed configuration and data retrieval software, ReXdesk.
The software can be downloaded from our website, www.influxtechnology.com.

1.3 SERVICE & SUPPORT

Please visit the support section in our website www.influxtechnology.com.
Download API examples and XML schema from https://www.influxtechnology.com/rexgen-support
The latest versions of the drivers, software, firmware, and documentations are available on our website.

2. HARDWARE & FUNCTIONALITY

In this chapter, you will find information on the device functionality and hardware.

2.1 FUNCTIONS

FUNCTION	ReXgen Air
CAN/CAN FD Data Logging	Yes
Digital and Analog Input	Yes
LIN Data Logging	Yes
GNSS Data Logging	Yes
Accelerometer and Gyroscope Logging	Yes

Table 1: Device Functions

2.1.1 RECORDING CAN/CAN FD DATA

The device can effectively log data on field tests and a bench via CAN/CAN FD interfaces. The device supports all standard CAN/CAN FD baud rates. ReXdesk software allows the user to configure ReXgen Air with custom baud rates and modify advanced bit timings. ReXdesk also enables the user to configure ReXgen Air with CAN & J1939 filters. All logged data is saved to the secure embedded memory. The user can configure triggers based on CAN IDs, parameter values & J1939 DM1 messages to start or stop logging. This data can be further transferred to the cloud using FTPs.

2.1.2 RECORDING LIN DATA

The device can effectively log data on field tests and the bench via LIN interfaces. Device can work in Slave or Master mode. All logged data is saved to the eMMC.

2.1.3 RECORDING GNSS DATA

The device consists of an internal GNSS module and an external active antenna with a supply voltage of 3V. This receiver can evaluate signals from the GNSS/QZSS, GLONASS, BeiDou and Galileo satellites. GNNS data can be logged at sampling rates up to 18HZ.

2.1.4 RECORDING ACCELEROMETER & GYROSCOPE DATA

The device consists of an internal accelerometer and gyroscope module. Acceleration output data rate is up to 6664 Hz with a vibration rate of ±2/±4/±8/±16 g at full scale. The angular output data rate of the gyroscope is up to 1666 Hz with ±125/±250/±500/±1000/±2000 dps at full scale.

2.1.5 DIGITAL & ANALOG INPUT FUNCTIONS

The input function can be used, for instance, to log status information from devices, machines, and sensors to determine and monitor switch and key states directly. You can record the data determined from the input functions, and it can be used for creating triggers for starting and stopping logging.

2.2 HARDWARE

2.2.1 INSTALLATION

The contents below specify the conditions to be ensured for the operation of ReXgen Air.

SIM CARD INSERTION

When inserting the sim card in a ReXgen Air device, ensure that you open the lid on the SIM slot correctly and carefully. Mishandling the SIM slot lid can damage the device and further damage the SIM card inside.

Also, ensure the SIM is inserted, as shown in the images above (Chip facing down).

GROUNDING

Since it is not required to provide a common ground between nodes, it is possible to have ground offsets. Each node may observe different single-ended bus voltages (common mode bus voltages) while maintaining the same differential voltage. Operating a CAN system with large ground offsets can increase electromagnetic emissions. If the system is sensitive to emissions, steps must be taken to eliminate ground offsets.

TERMINATION

ISO-11898 requires that the CAN bus have a nominal characteristic line impedance of 120Ω. Therefore, the typical terminating resistor value for each end of the bus is 120Ω. Bus termination is used to minimise signal reflection on the bus.

SUPPLY VOLTAGE

It is always recommended to keep the nominal voltage within the specified rate. The device also has internal protection against low energy voltage events due to supply wire noise.

ISOLATION

CAN Bus and USB of the device are not isolated; care must be taken when plugging the USB into the device. Removing the device's power supply is advised when interfaced with a PC via USB.

WARNING ⚠

Notes

- CAN Bus and USB Isolators can be purchased seperately.

MOUNTING

Always ensure to mount the device in a way that minimises vibration exposure and accounts for the IP rating of the device. ReXgen Air is supplied with four screws to assist you with mounting.

WARNING ⚠

An external active FAKRA C or FAKRA D antenna with a supply voltage of 3V is required for GNSS and LTE data logging. It is to be ensured that the antenna is connected correctly (at all times) and that it is not loose when the ReXgen Air is powered on. Operation with a loose antenna or without the antenna entirely can lead to GNSS/LTE data loss.

2.2.2 ENCLOSURE

WARNING ⚠

The device is not intended for use without the enclosure.

2.2.3 CABLES

The ReXgen Air has an automotive-style 24-pin Molex Connector. (This enables the device to be easily and robustly installed in production machines). Molex 24 PIN to D Sub 25 connector can be purchased separately.

*ReXgen Air requires external antenna to be purchased in addition along with the extension cable. The price of the unit does not include the external antenna which can be purchased off the shelf.

2.2.3.1 CONNECTOR PIN DETAILS

24-pin Molex Mini50 Connector

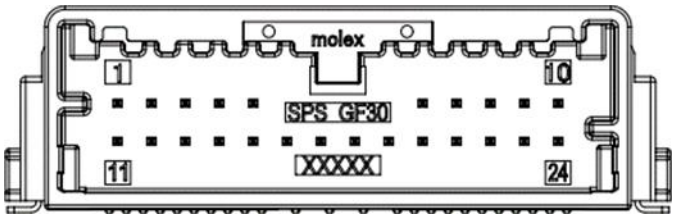

PIN No	PIN Function	Optional
Pin 1	RelayOut0	(Optional)
Pin 2	DigIn0	
Pin 3	AnalogGnd	
Pin 4	Adc1	
Pin 5	Clamp-15	
Pin 6	CAN0-L	
Pin 7	CAN1-L	
Pin 8	CAN2-L	Additional CAN FD 3rd bus
Pin 9	CAN3-L	Additional CAN FD 4th bus
Pin 10	usbDP_conn	To be mentioned while ordering
Pin 11	4.5Vout	
Pin 12	DIgIn1	
Pin 13	Adc0	
Pin 14	Erase#	
Pin 15	LIN	
Pin 16	GND	
Pin 17	PowerGND	
Pin 18	5-31V	
Pin 19	CAN0-H	
Pin 20	CAN1-H	
Pin 21	CAN2-H	Additional CAN FD 3rd bus
Pin 22	CAN3-H	Additional CAN FD 4th bus
Pin 23	usb5V	To be mentioned while ordering
Pin 24	usbDM_conn	To be mentioned while ordering

Male 25 pin Standard D Type connector (Mini 50 to D Sub 25 cable Sold separately).

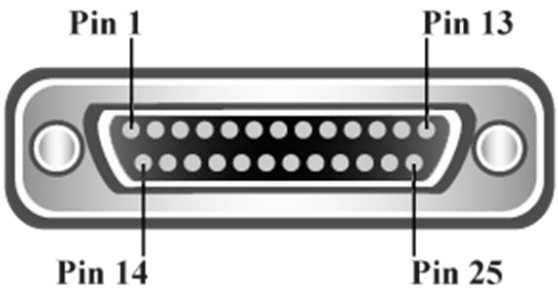

Pin No	Pin Function
Pin 3	CAN Bus 3 Low Signal (Available only on 4x CAN Model)
Pin 4	Analog Input 1 - do not apply voltages outside of the -10 to +10V range
Pin 5	Wake-Up pin to wake logger from sleep mode
Pin 6	CAN Bus 1 Low Signal
Pin 7	CAN Bus 0 Low Signal
Pin 9	5-31V Supply Voltage
Pin 10	+4.5V Instrumentation Supply Voltage, ensure that current draw is not more than 100mA
Pin 11	Erase PIN
Pin 12	Digital Input 0 - When used as an input, do not apply voltages outside the 0 to +12V range. More information on the use of this pin can be found in Annexure
Pin 13	CAN Bus 2 Low Signal (Available only on 4x CAN Model)
Pin 15	LIN 0 Signal
Pin 16	CAN Bus 3 High Signal (Available only on 4x CAN Model)
Pin 17	Analog Input 0 - do not apply voltages outside of the -10 to +10V range
Pin 18	Analog Ground
Pin 19	CAN Bus 1 High Signal
Pin 20	CAN Bus 0 High Signal
Pin 21	Ground
Pin 22	Power Ground
Pin 23	Relay Out (Optional Feature)
Pin 24	Digital Input 1 - When used as input, do not apply voltages outside the 0 to +12V range More information on the use of this pin can be found in Annexure
PIN 25	CAN Bus 2 High Signal (Available only on 4x CAN Model)

Notes

- Connector needs to be tightened properly to make a proper connection, ensuring reliable operation.
- Each end of the CAN/CAN FD bus must be terminated with a 120 Ohm resistor across CAN H & CAN L.
- Do not short circuit any pins.
- Maximum safe applied voltage for analog and digital I/P is +/- 28 V.

2.2.3.2 GNSS ANTENNA CONNECTOR

ReXgen Air uses a FAKRA C connector (Blue) for the GNSS and a FAKRA D connector (Bordeaux) for the LTE antenna.

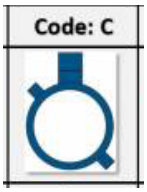

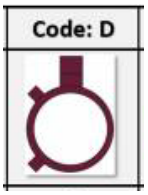

2.2.4 INDICATOR ELEMENTS – LED'S

4 LEDs are installed on ReXgen Air for indicating the CAN/CAN FD logging activity.

LED	Indication when BOLD	Indication when BLINKING
LED 1	Configured for CAN 0 Log	Active logging on CAN 0
LED 2	Configured for CAN 1 Log	Active logging on CAN 1
LED 3	Configured for GPS Log	Active logging
LED 4	Connected to LTE	

2.2.5 ACCESSORIES

Accessory	Part Number	Description
2-way Multi Connect Cable	INF4203	25-way D-sub (Female screw) breakout to two separate standard 9-way D-sub connectors.
5-way Multi Connect Cable	INF4204.1	25-way D-sub (Female screw) breakout to five separate standard 9-way D-sub connectors.
Molex mini50 (female) to D_Sub-25 (male)	INF4216	

3. GETTING STARTED

3.1 CONNECTING THE DEVICE

ATTENTION! ⚠

- The device must be installed, connected, and commissioned by a qualified technician.
- Ensure the power supply is disconnected before connecting the device.
- Only use components from the starter kits or the accessories supplied.

3.1.1 POWER

Power supply to the product is given using a Molex connector. DSub 9 or DSub 25 will be used if the customer uses the multi connect cables. This is applicable for all the other connections mentioned below:

Notes

- Connector needs to be tightened properly to make a proper connection, ensuring reliable operation.
- Do not short circuit any pins.
- Maximum safe applied voltage is +34V

3.1.2 CAN/CAN FD

ReXgen Air can be interfaced to the CAN/CAN FD bus from which data is to be logged using D-Sub 9 connector A or connector B. The CAN-high and CAN-low from the vehicle or machine terminals must match the CAN-high and CAN-low terminal of the ReXgen Air. ReXgen Air should be configured with the same baud rate as the device to which it is interfaced.

Notes

- Connector needs to be tightened properly to make a proper connection, ensuring reliable operation.
- Each end of the CAN/CAN FD bus must be terminated with a 120 Ohm resistor accros CAN H & CAN L.
- Do not short circuit any pins.
- Maximum safe applied voltage is +28V.
- CAN/CAN FD bus is not isolated by default; isolating device can be purchased seperately.

3.1.3 ANALOG & DIGITAL INPUT

ReXgen Air supports 2x analogue inputs in the range of +/- 10 V. The two analogue inputs are interfaced to the ReXgen Air via a D-Sub 9 connector B. ReXgen Air also supports two digital inputs. The digital inputs are interfaced to the ReXgen Air via a D-Sub 9 connector A.

Notes

- Connector needs to be tightened properly to make a proper connection,ensuring reliable operation.
- Do not short circuit any pins.
- Maximum safe applied voltage is +28V

3.1.4 USB

You can connect the device to a PC via the communication gateway USB for configuration and test purposes. The device is supplied with a standard Micro USB cable. Please note that the USB is not isolated, and an isolator can be purchased separately.

*x1 micro USB cable to be supplied with any quantity of ReXgen Air purchased.

3.2 SOFTWARE INSTALLATION

Download the latest version of our ReXdesk software from the Influx Technology website.

Notes

- Before proceeding with the installation, please ensure that you have acquired administrative privileges.

Make sure you have installed the Microsoft Visual C++ Redistributable.
You can download it from the following link: https://www.microsoft.com/en-us/download/details.aspx?id=48145

To begin the installation of the ReXdesk software, open the installer by running the set-up file.

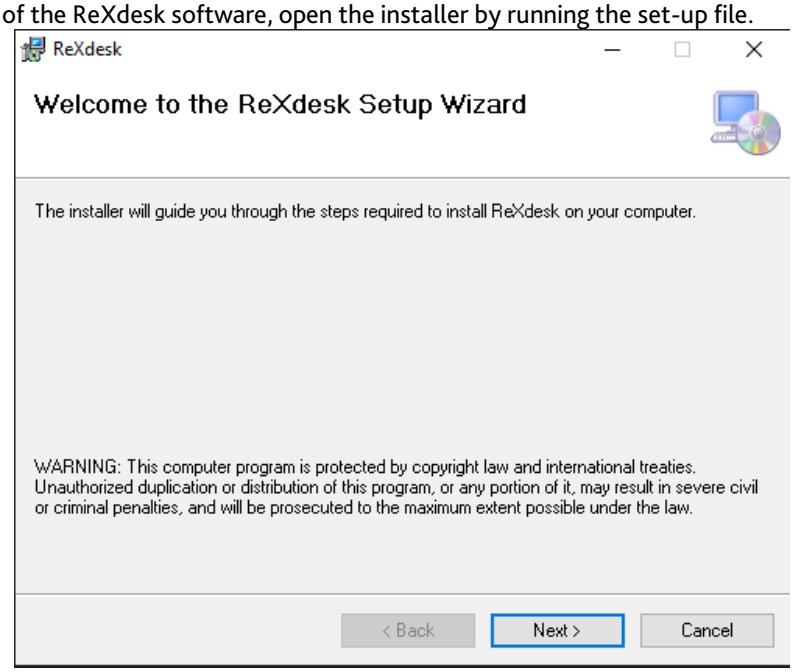

- To continue with the installation of ReXdesk on your system, click 'Next'.
- To cancel the installation at this stage, click 'Cancel'. (No software will have been installed on the system at this point.)

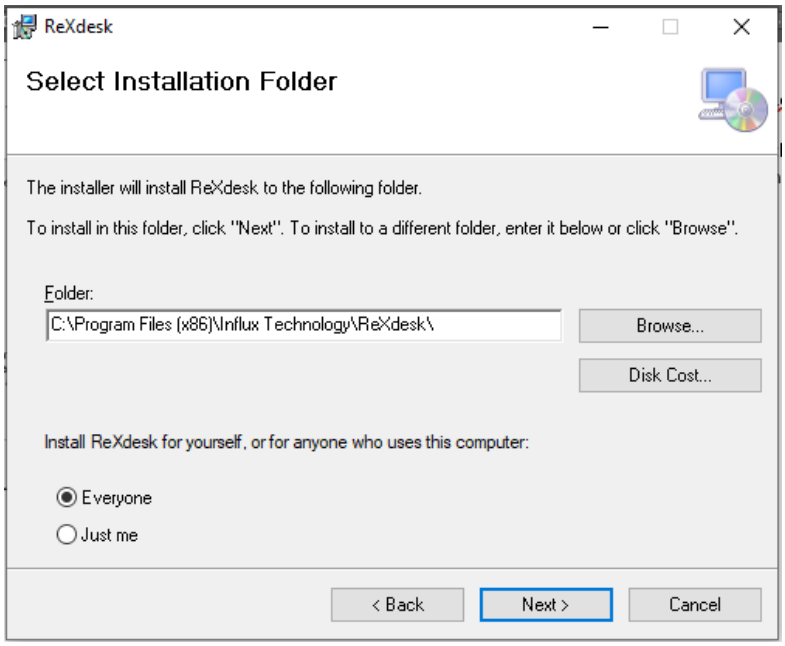

- Select the folder in which you wish to install the software; it is preferred to use the default location.
- Select the preference for computer user installation to determine which computer users will access the ReXdesk software.
- Click 'Next' to continue with the installation

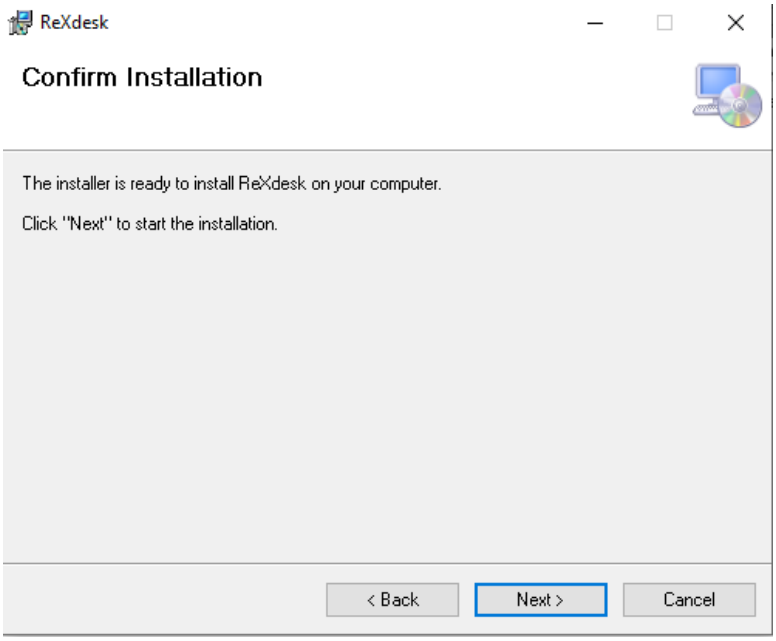

- To continue with the installation of ReXdesk on your system, click 'Next'.

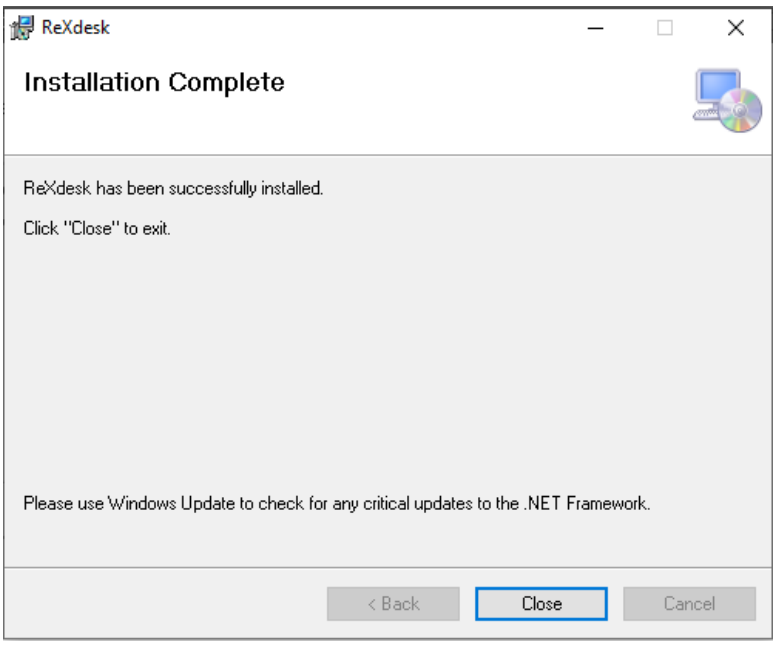

- Once the installation is complete, this window will appear.
- Click 'Close' to close the window. ReXdesk is now successfully installed on your system.

3.3 DRIVER INSTALLATION

To install the ReXgen Air driver, locate the ReXgen Air Drivers installer from the start menu.

Notes

- Before proceeding with the installation, please ensure that you have acquired administrative privileges.

Run the ReXgenInstaller.exe file.

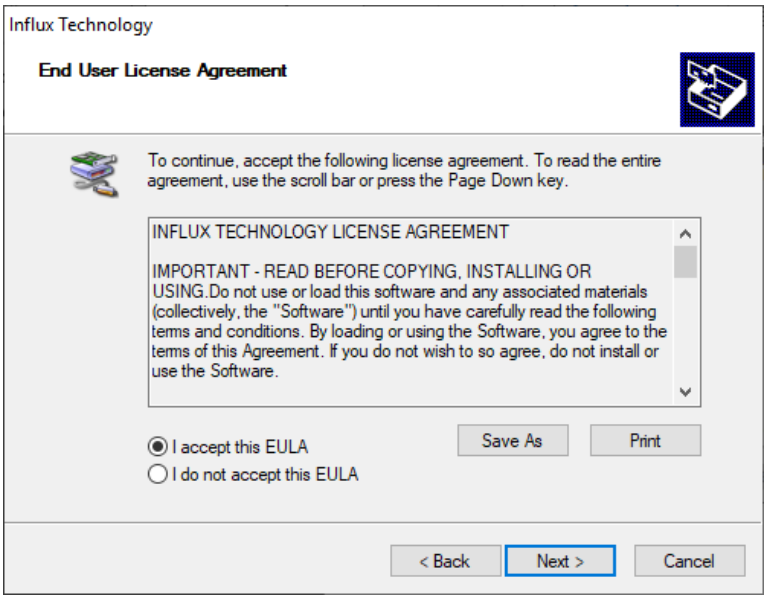

- To continue installing the ReXgen Air device driver on your system, click 'Next'.
- To cancel the installation at this stage, click 'Cancel'. (No software will have been installed on the system at this point.)
- Please read the licence agreement carefully.
- Once you understand and accept the licence agreement, please click 'I accept the terms in the licence agreement' to continue installing the driver. If you do not accept the terms, please click 'Cancel' to stop the installation at this point.
- Click 'Next' to continue the installation process.

- Once the installation is complete, this window will appear.

- Click 'Finish' to close the window. The ReXgen Air driver is now successfully installed on your system.

3.4 FIRMWARE UPDATE

All newly released firmware updates will be available in www.influxtechnology.com

Firmware can be updated using the Reflash option in the ReXdesk software.

Choose the file with prefix firmware628_xx_xx.bin

Notes

- While reflashing, the LEDs on the device will flash alternatively, do not disconnect or change the power source of the device during this process.
- The device will disconnect from the PC while it is reflashing. It will automatically reconnect once reflashing is completed.

4. ANNEXURES

This chapter contains technical data and certificates.

4.1 DIGITAL INPUT FUNCTION

The Digital Input Output pins will consider voltages below 0.8V as 'low' and above 2.5V as 'high'. Examples of how you could utilise the I/O pins if configured as inputs are shown below:

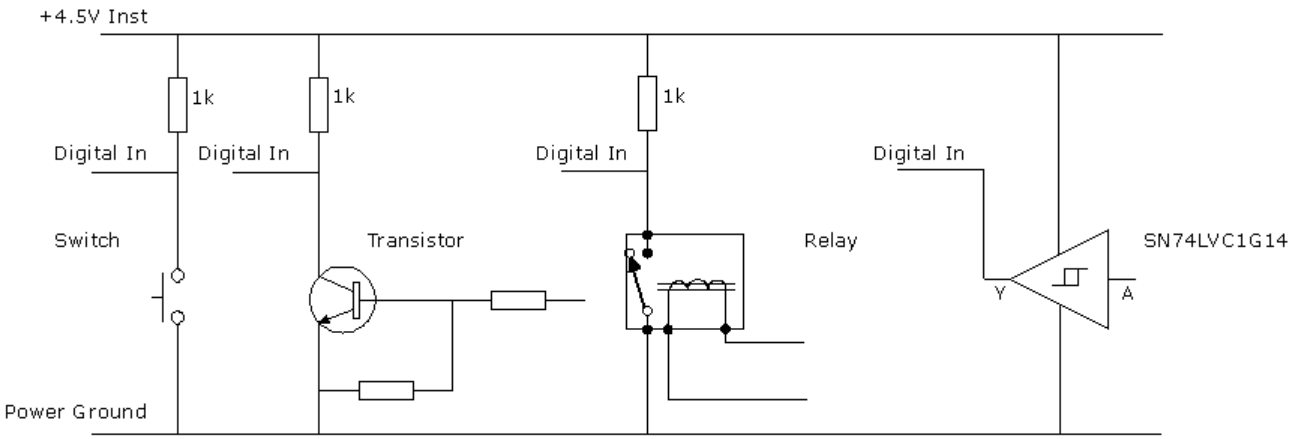

4.2 THE WAKE UP PIN

The Loggers Wake up pin is held high and the logger can be woken up by switching the pin to ground in one of the three ways shown below, if the pin is switched to ground for longer than 20ms it will wake from sleep mode

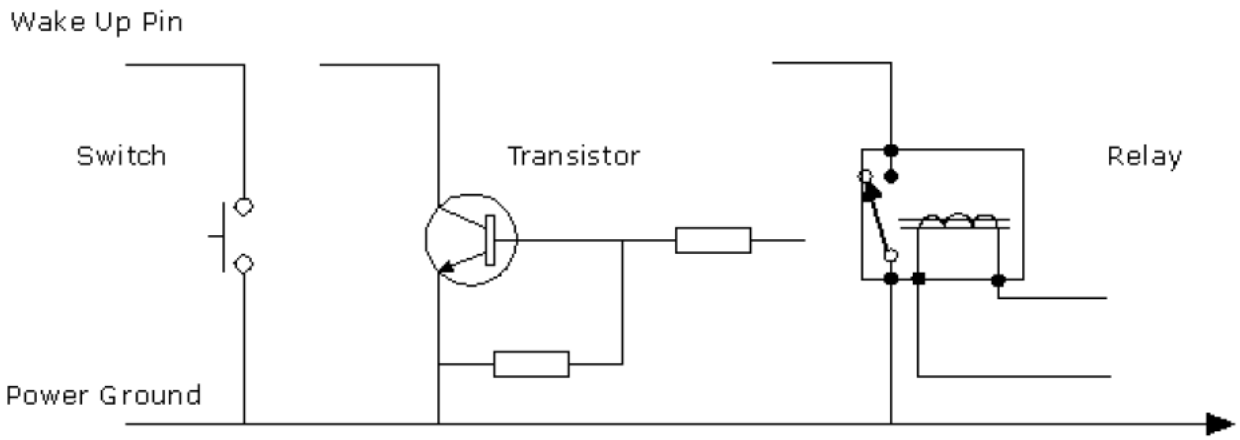

4.3 CAN OVERVIEW

CAN stands for "Controller Area Network" and is defined in the ISO 11898 specification.

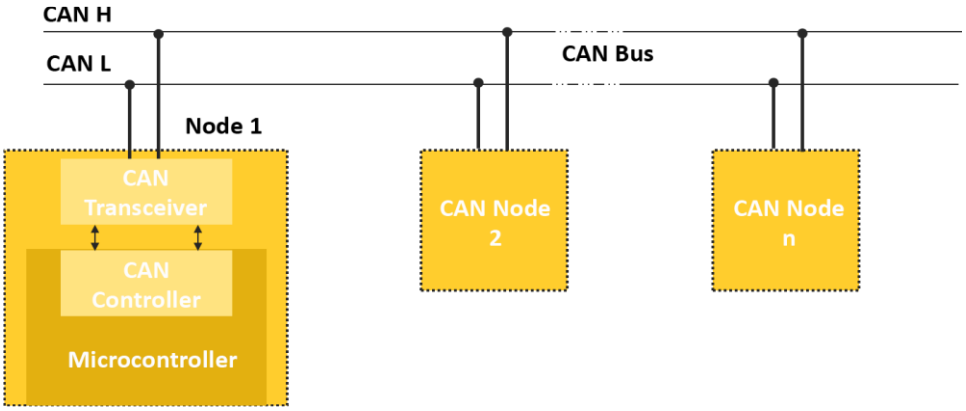

The Controller Area Network (CAN, also known as CAN Bus) is a vehicle bus standard designed to allow electronic control units and devices to communicate in applications without a host computer. As an alternative to conventional multi-wire looms, the CAN Bus allows various electronic components (such as electronic control units, micro-controllers, devices, sensors, actuators and other electronic components throughout the vehicle) to communicate on a single or dual-wire network data bus up to 1 Mbit/s.

CAN BUS COMPONENTS

CAN Controller receives the transfer data from the microcomputer integrated into the control unit/device (also known as CAN Node). The CAN controller processes this data and relays it to the CAN transceiver. Also, the CAN controller receives data from the CAN transceiver, processes it and relays it to the microcomputer integrated into the control unit/device (CAN Node).

CAN Transceiver is a transmitter and receiver in one. It converts the CAN controller's data into electrical signals and sends it over the bus lines. Also, it receives data and converts this data for the CAN controller.

CAN Data Bus Termination is a resistor (R) typically of 120 ohms. It prevents data sent from being reflected at the ends and returning as an echo and ensures that the bus gets correct DC levels.

MAXIMUM BUS SPEED & CABLE LENGTH

The CAN bus uses inexpensive twisted-pair wires to send data. All the nodes are connected to the same line (bus) with small branch lines. The signals on the two CAN lines have the same data sequence, but their amplitudes are opposite. So, if a pulse on the CAN-H line goes from 2.5V to 3.75V, then the corresponding pulse on the CAN-L line goes from 2.5V to 1.25V (opposite than CAN-H).

The maximum speed of a CAN bus, according to the standard, is 1 Mbit/second. At a speed of 1 Mbit/s, a maximum cable length of about 40 meters (130 ft.) can be used. This is because the arbitration scheme requires that the wavefront of the signal can propagate to the most remote node and back again before the bit is sampled.

- Maximum achievable speed: - 1Mbps.

- Maximum length achievable: - 500 metres at a lower speed of 125 Kbps.
- The bus should be terminated at both ends with 120-ohm resistance.
- Removal of one node will not affect the communication in the bus.

CAN Baudrate	Maximum Bus Length
1 Mbits/s	25 m
500 kbit/s	100 m
250 kbit/s	250 m
125 kbit/s	500 m

Influx Technology Headquaters

Office Suite 22,
Building 03 Millbrook Proving Ground,
Station Lane Millbrook
Bedford
MK45 2JQ

Telephone: +44 (0) 1525 842504
Sales: sales@influxtechnology.com

Influx Big Data Solutions Pvt Ltd

3358E,
13th Main Rd,
HAL 2nd Stage,
Doopanahalli,
Indiranagar,
Bengaluru, 560008
India

Phone: +91 8043781599
Sales: sales_india@influxtechnology.com

Influx Technology Asia

Rm.722,
Flr.7,
Lisheng Tower,
Wangfujing Street 201,
Dongcheng District,
Beijing,
100005,
China

Telephone: 86-10-5718-1640
Email: info@influxasia.com